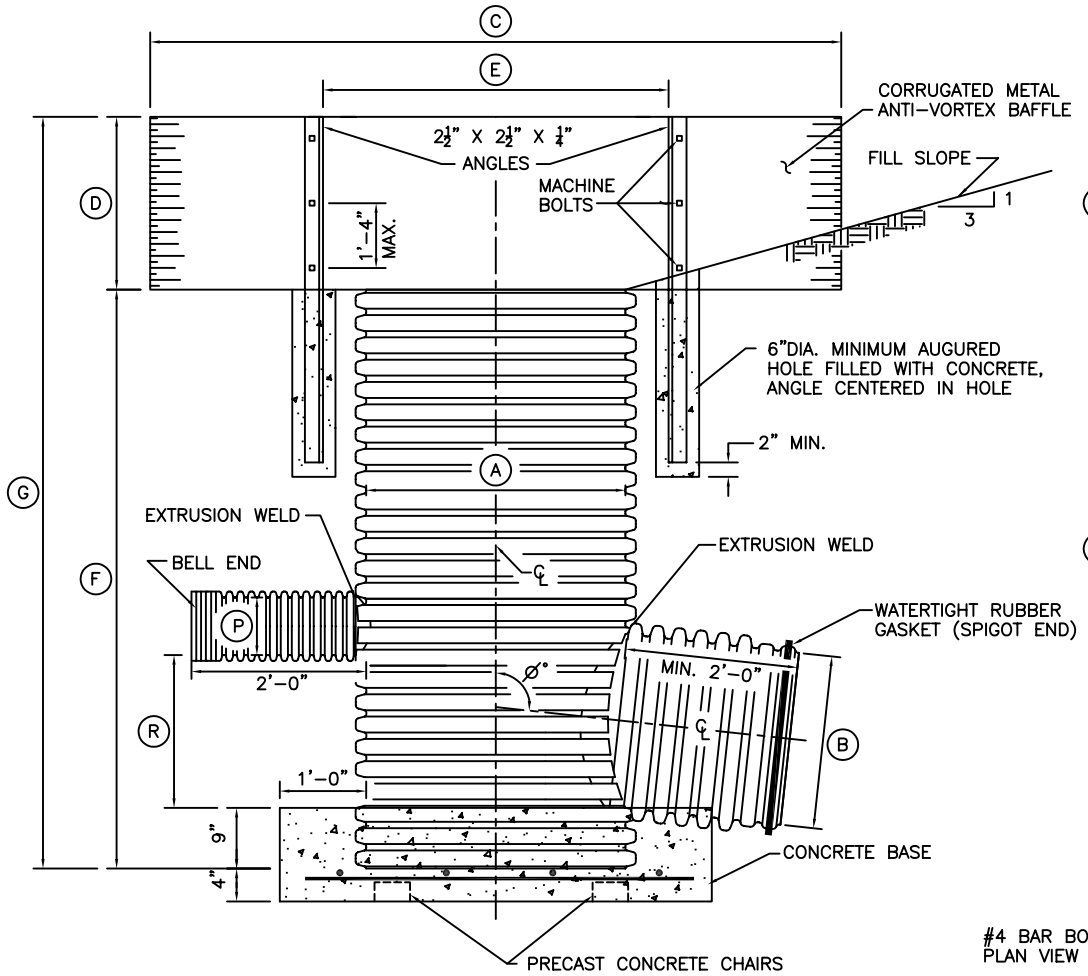

SECTION ELEVATION ON CENTERLINE

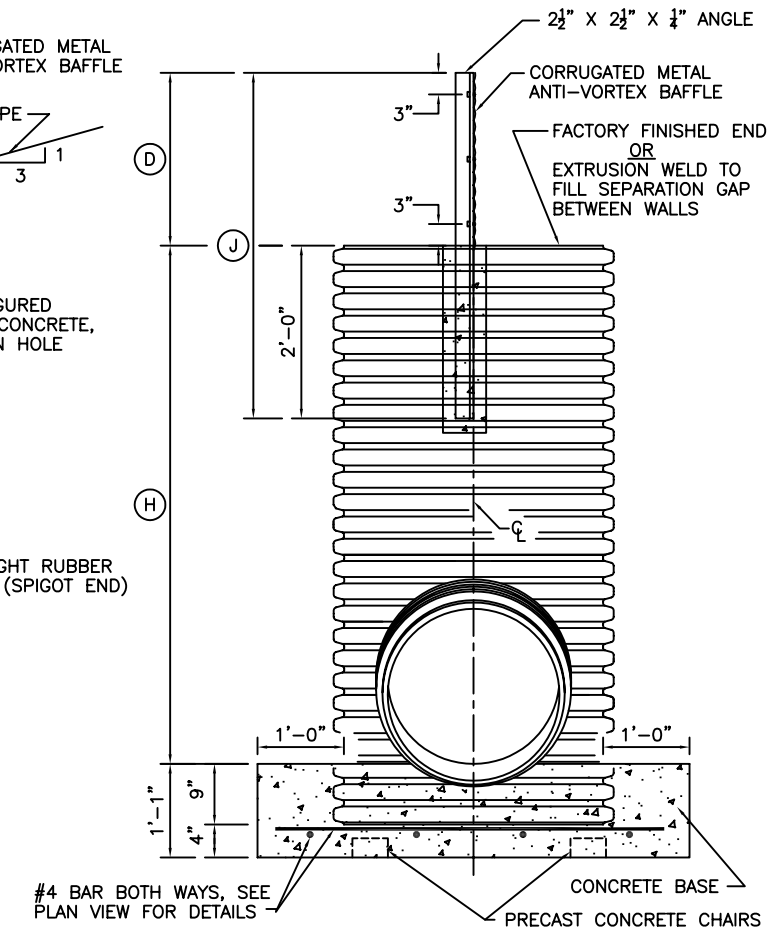

DOWNSTREAM ELEVATION

TABLE SHOWING DIMENSIONS AND MATERIAL

STRUCTURE NUMBER			
GULLY OR LATERAL			
STATION			
	DIMENSIONS		
A (INSIDE DIA.)			
B (INSIDE DIA.)			
C			
D			
E (EQUALS A PLUS 2'-0")			
F (MAX. 6'-9")			
G			
H (MAX. 6'-0")			
J			
L (EQUALS A PLUS 2'-0")			
M			
N			
P (INSIDE DIA.)			
R			
C.M. SHEET THICKNESS FOR BAFFLE			
MATERIAL ITEMS	QUANTITY REQUIRED		
2 1/2" X 2 1/2" X 1/4" ANGLES X J, GALV.			
D X C CORRUGATED METAL SHEETS, GALV.			
1/2" X 1 1/4" STEEL CADMIUM PLATED MACHINE BOLTS			
1/2" STEEL SPLIT LOCK WASHERS			
1/2" STEEL CADMIUM PLATED NUTS			
#4 REINFORCING STEEL BARS, LIN. FT.			
#4 REINFORCING STEEL BARS, LB.			
VOLUME OF CONCRETE, CU.YD.			
Ø° DEGREES-ANGLE			
β° DEGREES-ANGLE			
SLOPE OF B DIA. PIPE IN FT./FT.			

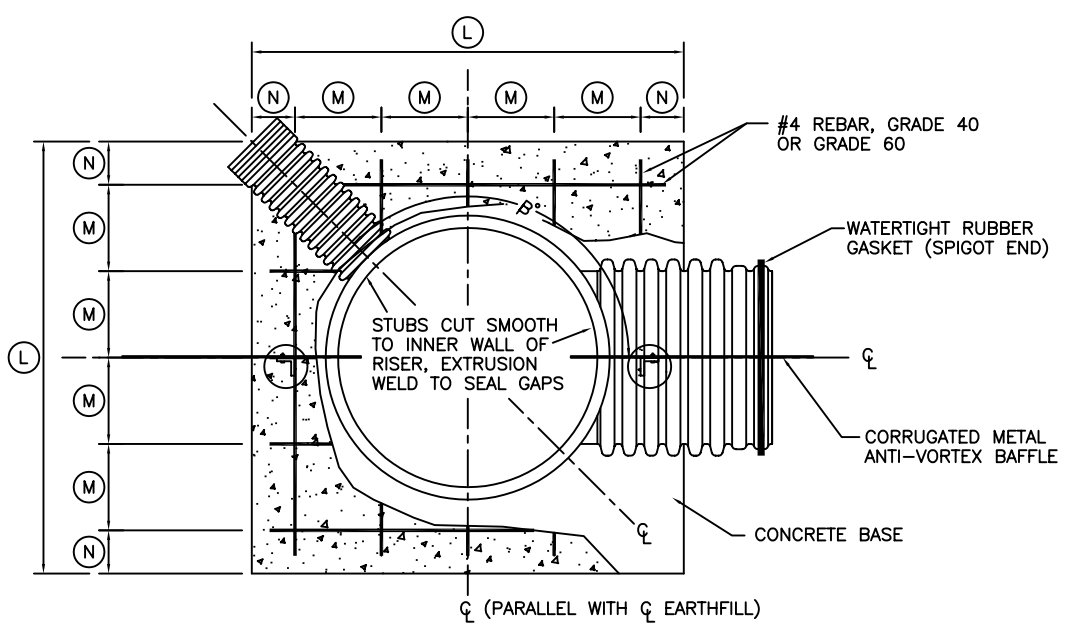

PLAN VIEW

REQUIREMENT TABLE

X IN BOX INDICATES DETAIL NEEDED

ANTI-VORTEX BAFFLE SHOWN IS REQUIRED	☐
ANTI-VORTEX BAFFLE SHOWN IS NOT REQUIRED	☐
TRASH RACK WITH BAFFLE IS REQUIRED SEE SHEET____FOR DETAILS	☐
SAFETY GUARD IS REQUIRED SEE SHEET____FOR DETAILS	☐

MATERIAL NOTES

1. THE VERTICAL INLET SHALL BE SHOP FABRICATED.
2. DUAL WALL P.E. PIPE SHALL BE ONE OF THE FOLLOWING:
   - ADS N-12 PROLINK ULTRA
   - HANCOR BLUESEAL
   - PRINSCO GOLDFLO WT
   - OR APPROVED EQUIVALENT DUAL WALL PIPE

CONSTRUCTION NOTES

1. ALL HOLES FOR BOLTS SHALL BE 9/16" DIA.
2. PRECAST CONCRETE CHAIRS SHALL BE USED TO SUPPORT THE REINFORCING STEEL BARS. PRECAST CONCRETE CHAIRS SHALL BE MANUFACTURED OF 3000 PSI CONCRETE AND SHALL HAVE TIE WIRES SECURELY ANCHORED IN THE CHAIR OR A V-SHAPED GROOVE AT LEAST 3/4 INCH IN DEPTH MOLDED INTO THE UPPER SURFACE TO RECEIVE THE STEEL BAR AT THE POINT OF SUPPORT. PRECAST CONCRETE CHAIRS SHALL BE MOIST AT THE TIME CONCRETE IS PLACED.
3. WHEN L IS FULL FOOT:
   M = 12", N = 6"
   WHEN L IS FULL FOOT PLUS 6 INCHES
   M = 11", N = 6"
4. LENGTH OF REINFORCING STEEL BARS IS L MINUS 6 INCHES.

REVISIONS		
DATE	APPROVED	TITLE

Date
Designed
Drawn GRH 4/04
Checked
Approved

DUAL WALL POLYETHYLENE INLET
GRADE STABILIZATION STRUCTURE

NAME COUNTY, MINNESOTA

NAME WATERSHED

USDA NRCS
Natural Resources Conservation Service

File No.
MN-ENG-304

Drawing No.
MN304.DWG
Revised 4/04

Sheet 1 of 1