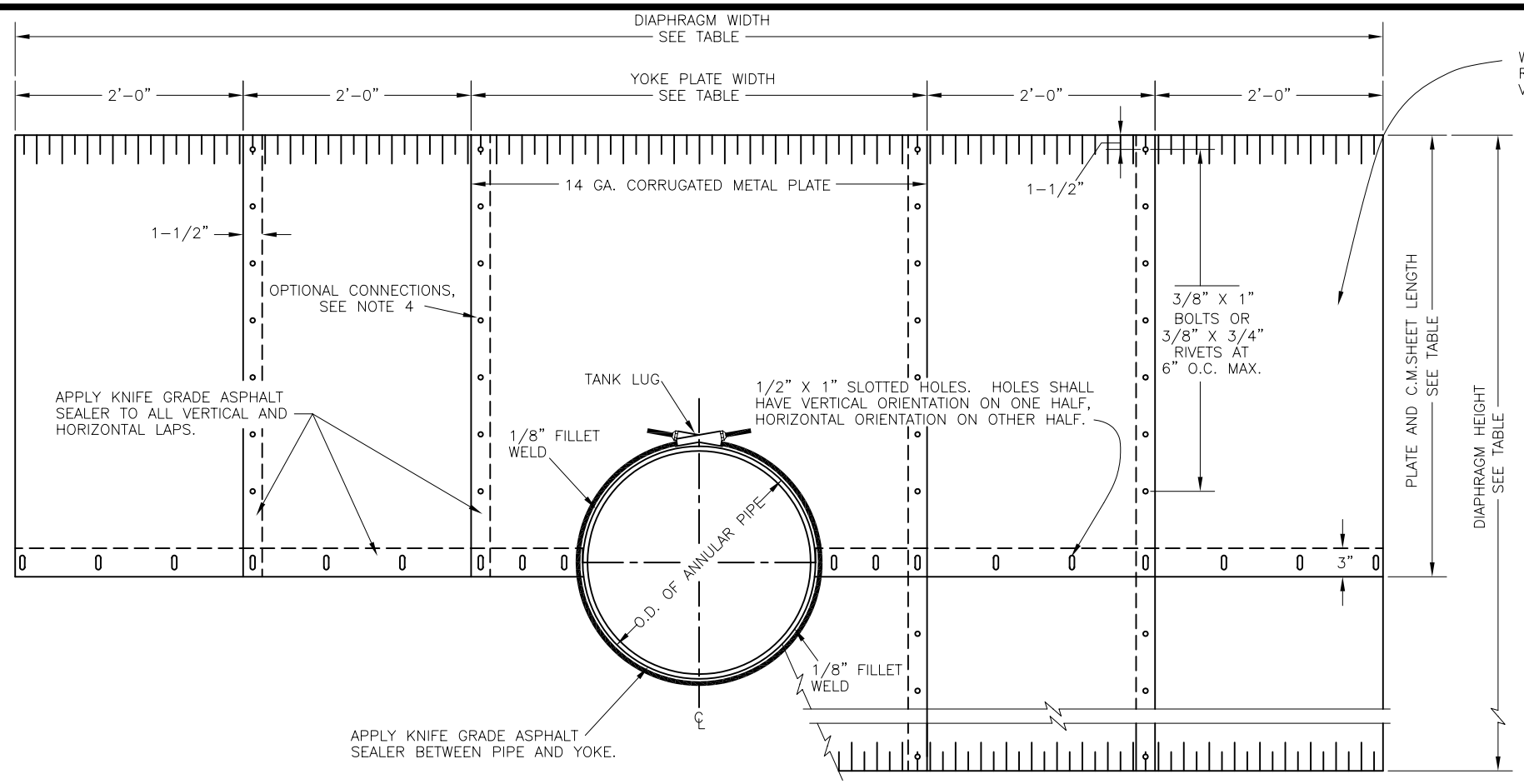

FRONT ELEVATION

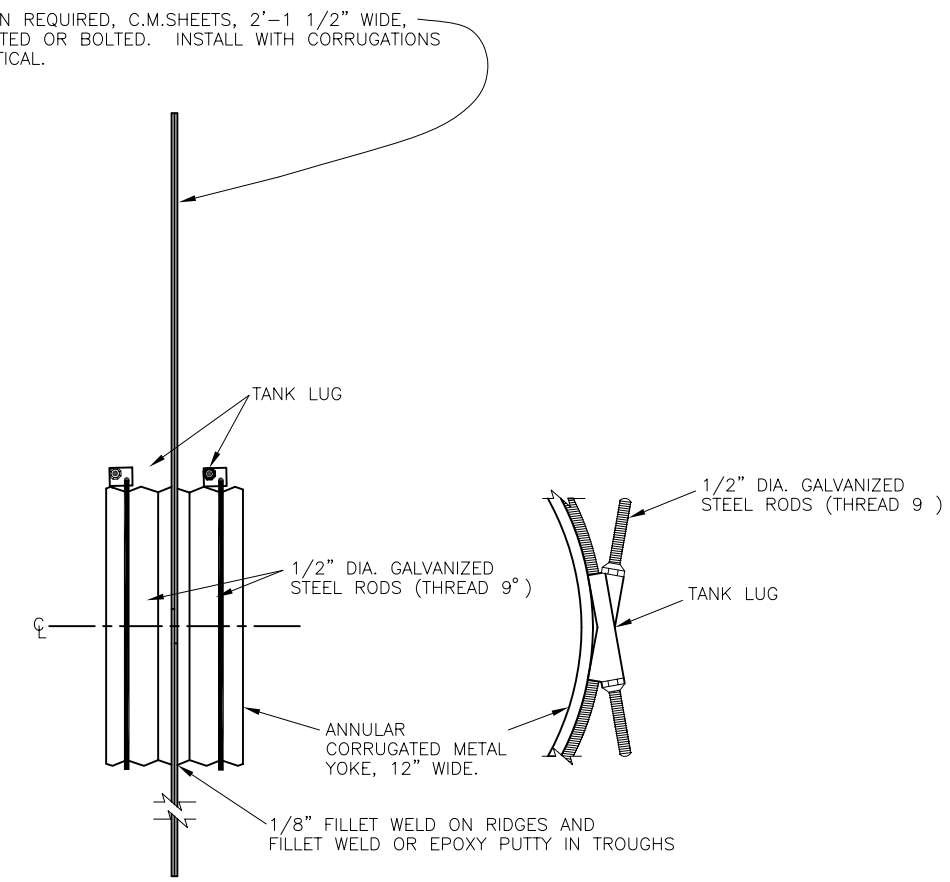

SIDE ELEVATION DETAIL OF TANK LUG

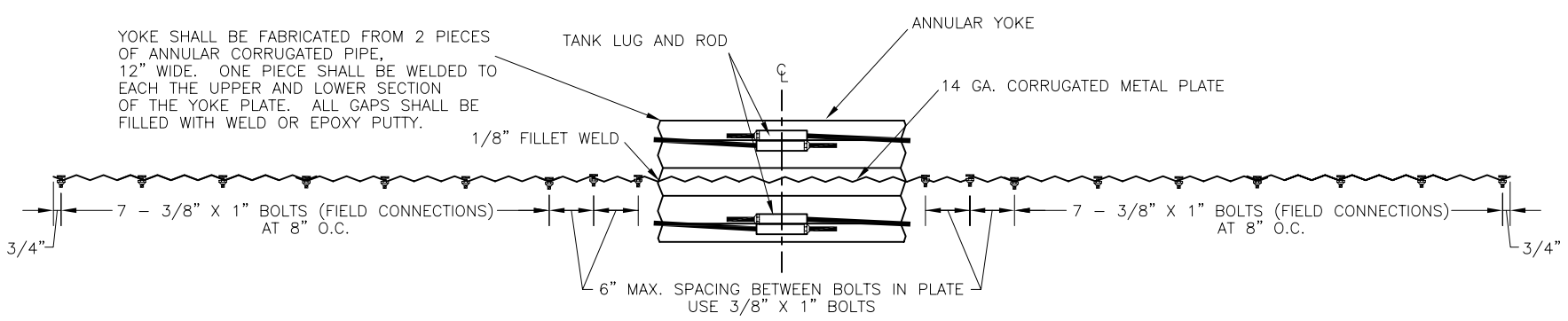

PLAN

NOTES

1. SEE PLAN VIEW FOR:
   A: NUMBER OF DIAPHRAGMS.
   B: PIPE GAGE, METAL TREATMENT AND COATING.
2. ALL NUTS, BOLTS, RIVETS, AND WASHERS SHALL BE GALVANIZED, CADMIUM PLATED, OR STAINLESS STEEL.
3. YOKE WELDS AND THE ASSEMBLY OF CORRUGATED SHEETS (WHEN REQUIRED) SHALL BE SHOP FABRICATED.
4. CONNECTION OF CORRUGATED SHEETS WITH YOKE PLATE MAY BE EITHER SHOP FABRICATED USING 3/8" X 3/4" RIVETS ON 6" CENTERS OR FIELD BOLTED USING 3/8" X 1" BOLTS ON 6" CENTERS.
5. AFTER WELDING, DAMAGED ZINC COATING SHALL BE REPAIRED AS FOLLOWS:
   A: THOROUGHLY CLEAN THE DAMAGED AREAS ON BOTH SIDES OF THE DAMAGED METAL WITH A WIRE BRUSH.
   B: PAINT THE CLEANED AREAS WITH TWO COATS OF ZINC OXIDE-ZINC DUST PAINT.

TABLE OF DIMENSIONS FOR NRCS DIAPHRAGMS (PRESSURIZED PIPE)

PIPE DIAMETER (IN.)		8	10	12		15	18	21	24	30	36	42	48	54	60
DIAPHRAGM SIZE	HEIGHT (FT.-IN.)	4-0	4-0	4-0	6-0	6-0	6-0	7-6	7-6	7-6	7-6	7-6	9-0	9-0	9-0
	WIDTH (FT.-IN.)	4-0	4-0	4-0	10-0	10-0	10-3	12-0	12-0	12-0	12-0	12-3	14-0	14-0	14-0
YOKE PLATE	NO. REQUIRED	2	2	2	2	2	2	2	2	2	2	2	2	2	2
	LENGTH (IN.)	25.5	25.5	25.5	37.5	37.5	37.5	46.5	46.5	46.5	46.5	46.5	55.5	55.5	55.5
	WIDTH (IN.)	48	48	48	24	24	27	48	48	48	48	51	72	72	72
CORRUGATED METAL SHEETS	NO. REQUIRED	0	0	0	8	8	8	8	8	8	8	8	8	8	8
	LENGTH (IN.)	-	-	-	37.5	37.5	37.5	46.5	46.5	46.5	46.5	46.5	55.5	55.5	55.5
	GAGE	-	-	-	16	16	16	16	14	14	14	14	14	14	14

TABLE OF DIMENSIONS FOR NRCS DIAPHRAGMS (NON-PRESSURIZED PIPE)

PIPE DIAMETER (IN.)		8	10	12	15	18	21	24	30	36	42	48	54	60
DIAPHRAGM SIZE	HEIGHT (FT.-IN.)	3-8	3-10	4-0	4-3	4-6	4-9	5-0	5-6	6-0	6-6	7-0	7-6	8-0
	WIDTH (FT.-IN.)	4-0	4-0	4-0	6-3	6-6	6-9	7-0	7-6	8-0	8-6	9-0	9-6	10-0
YOKE PLATE	NO. REQUIRED	2	2	2	2	2	2	2	2	2	2	2	2	2
	LENGTH (IN.)	23.5	24.5	25.5	27	28.5	30	31.5	34.5	37.5	40.5	43.5	46.5	49.5
	WIDTH (IN.)	48	48	48	27	30	33	36	42	48	54	60	66	72
CORRUGATED METAL SHEETS	NO. REQUIRED	0	0	0	4	4	4	4	4	4	4	4	4	4
	LENGTH (IN.)	23.5	24.5	25.5	27	28.5	30	31.5	34.5	37.5	40.5	43.5	46.5	49.5
	GAGE	-	-	-	16	16	16	14	14	14	14	14	14	14

		Date
Designed		
Drawn	GRH	1/31/02
Checked	GRH	7/16/03
Approved		

ANTI-SEEP DIAPHRAGM FOR 8" TO 60" ANNULAR CORRUGATED METAL PIPE

NAME WATERSHED

NAME COUNTY, MINNESOTA

USDA NRCS Natural Resources Conservation Service

File No.
MN302.DWG

Drawing No.
MN-ENG-302
Revised 4/04

Sheet 1 of 1