(ELEV.)

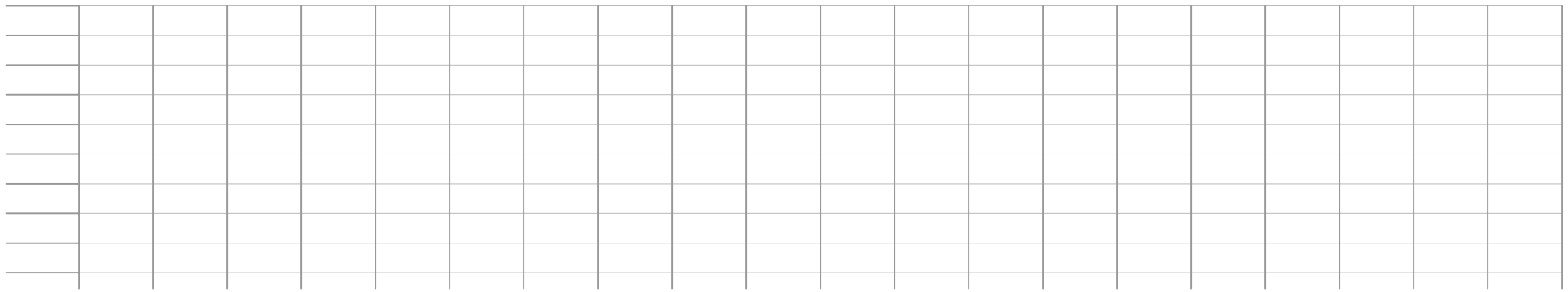

(STATIONING)

PROFILE OF PLANNED TILE

HORZ. SCALE: 1" =_____FT.

CONSTRUCTION SPECIFICATIONS (TILE DRAINAGE BLOCKS):

DESCRIPTION
The work shall include all labor, materials, and equipment required to assemble the pipe sections, excavate and prepare the bed for the pipe and place and compact the backfill to the lines and grades shown on the drawings.

MATERIALS (GENERAL)
All materials must be handled and stored in a careful and workmanlike manner. All pipes and fittings must be of the length, size and type specified. Unless otherwise noted, all pipes and fittings must be attached according to manufacturers' recommendations. All materials shall be carefully inspected before they are installed. All materials with physical imperfections or that are damaged, lost, broken or deemed unsuitable due to the Contractor's method of installation, handling, or negligence must be replaced at the Contractor's expense.

MATERIALS (SINGLE-WALL POLYETHYLENE PIPE)
Corrugated polyethylene pipe and fittings, as appropriate for the type and size specified, shall meet the requirements of ASTM-F-405 for 6 inch diameter pipe and fittings or ASTM-F-667 for 8-24 inch diameter pipe and fittings.

Joints shall be minimized to the extent practical. When required and unless otherwise shown on the drawing, coupling bands of the appropriate size and type are to be provided at each pipe joint. The hardware for fastening the coupling bands to the connecting pipes shall be fabricated to permit sufficient tightening to provide the required joint tensile strength and, if required, water-tightness, without failure of the fastening.

MATERIALS ("DUAL-WALL" HDPE PIPE)
Unless otherwise specified, the High Density Polyethylene Pipe (HDPE) shall have a smooth interior and annular exterior corrugations. Manning's "n" value for the pipe shall not exceed 0.012.

For pipe sizes 12 inches and larger, the pipe shall meet the requirements of AASHTO M294 Type S. Pipe and fitting material shall be high-density polyethylene meeting the requirements of ASTM D3350 Cell Classification 325420C. Where joints are necessary, pipes shall be joined with a bell-and-spigot joint meeting the requirements of AASHTO M252 or M294. The bell shall be an integral part of the pipe and provide a minimum pull-apart strength of 400 lbs. The bell-and-spigot joint shall incorporate a rubber gasket meeting the requirements of ASTM F477 and shall be watertight meeting ASTM D3212. Gaskets shall be installed on the pipe or as recommended by the pipe manufacturer. A joint lubricant supplied by the manufacturer shall be used on the gasket and bell during assembly.

For pipe sizes 10 inchs & smaller, the pipe shall meet the requirements of AASHTO M252 Type S. Pipe and fitting material shall be high-density polyethylene meeting the requirements of ASTM D3350 minimum Cell Classification 324420C. Gasketed couplers shall be provided for each pipe joint and must meet the requirements of ASTM F477. The gaskets shall be those recommended by the manufacturer for use with the coupler, fittings, and pipe to provide watertightness to the joint.

MATERIALS (CORRUGATED METAL PIPE)
Unless otherwise specified, the pipe corrugations may be either riveted annular or lock-seam helical. Lock-seam helical pipe shall have re-rolled ends with each end having a minimum of four corrugations.

All corrugated steel pipe shall be metallic zinc-coated unless otherwise specified. Other coatings include aluminum-coated, aluminum-zinc alloy-coated. The pipe shall conform to the requirements of ASTM-A-760, A 762, A-885, for the specified type, class, and fabrication of pipe and coating. When necessary, fittings including coupling bands shall be made from steel conforming to ASTM-A-444, A-742, A-806, and A-885. The coating of fittings shall be the same as that specified for the corrugated metallic-coated pipe

HANDLING THE PIPE
The Contractor shall furnish all equipment necessary to transport and place the pipe without damaging it or its coatings. When handling and placing the pipe, care shall be taken to prevent impact blows, abrasion damage, and gouging or cutting (by equipment or other site materials).

All special handling requirements of the manufacturer shall be strictly observed. Special care shall be taken to avoid impact when the pipe must be handled at temperatures of 40° F or less. The pipe shall be stored on a relatively flat surface so that the full length of the pipe is evenly supported.

CONNECTIONS
Where existing tile lines not shown on the drawings are crossed, they shall be bridged across the new trench or they shall be connected into the new tile lines, as directed by the Project Technician.

INSTALLATION AND ASSEMBLY OF PIPE
The trench or excavation for the placement of the pipe shall be constructed to elevations and grades as shown or as staked. The polyethelyne pipe shall be placed and bedded in according to the requirements of ASTM-F-449, "Standard Recommended Practices for Subsurface Installation of Corrugated Thermoplastic Pipe for Agricultural Drainage or Water Table Control". Unless otherwise specified, the pipe shall be assembled and installed in accordance with the manufacturer's recommendations. Trench shields, shoring and bracing, or other methods necessary to safeguard the workers and the work, and to prevent damage to existing improvements, shall be furnished, placed, and subsequently removed by the Contractor.

Unless otherwise specified, no filter or envelope is required. The bottom of the trench shall be shaped to form a semi-circular groove in its center. The pipe shall be firmly and uniformly bedded throughout its entire length to the specified elevation and grade. The minimum trench width at the top of the pipe should be adequate to permit installation and provide suitable bedding conditions to support the load on the pipe. Friable material from the sides of the trench shall be placed around the pipe, completely filling the trench to a depth of not less than 6 inches over the top of the pipe. Suitable material must not contain hard clods, rocks, frozen soil or fine material, which will cause a silting hazard to the drain. Pipe placed during any day shall be blinded by the end of the day.

Unless otherwise noted, excavation for and subsequent installation of pipe sections shall begin at the outlet end and progress upstream. All field cut pipe ends shall have all burrs removed prior to assembling the joints. All pipelines shall be free of foreign material during installation.

BACKFILLING
Earth backfill material shall be placed in the trench in a manner to ensure that the pipe does not become displaced. Do not use compaction equipment or methods that produce horizontal or vertical earth pressures that may cause excessive displacements or damage to the pipe. Execute backfill to the lines and grades shown on the plans or as staked.

Automatic backfilling machines may be used only when approved by the Engineer. Backfill shall extend above the ground surface and be well rounded over the trench.

Unless otherwise specified, where the pipe is laid under roads, terraces and other locations as designated on the drawings or by the Engineer, the backfill shall be placed in successive layers of not more than 6 inches and each layer shall be compacted before the next layer is placed.

OUTLET EXCAVATION
When specified, the required excavations shall be performed to the limits and grades shown on the drawings or as staked. The excavation may involve cleaning out or deepening an existing open ditch system or creating a new one to convey water away from the constructed outlet of the tile drainage system. The excavated material shall be deposited as shown in the drawings or as specified by the Engineer.

OTHER:

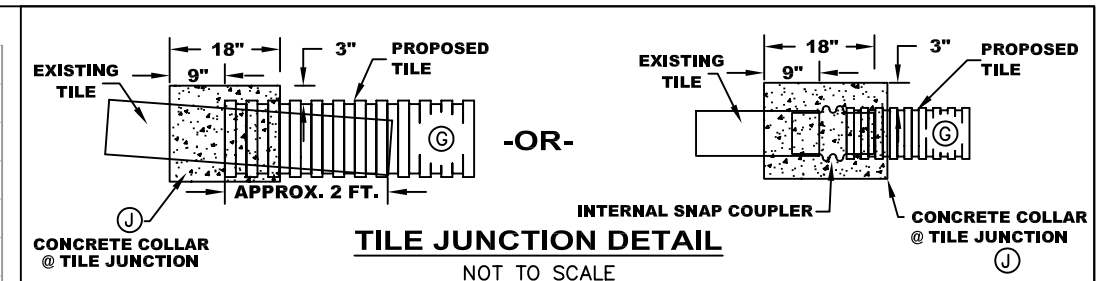

TILE JUNCTION DETAIL

NOT TO SCALE

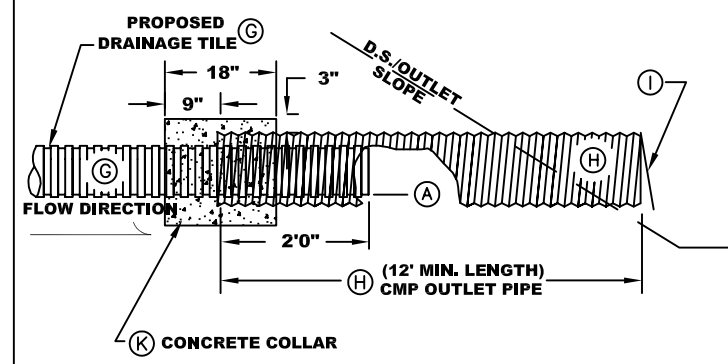

TILE OUTLET

NOT TO SCALE

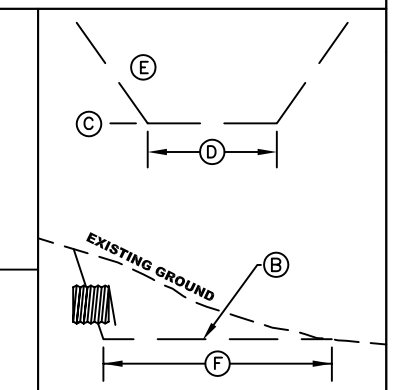

TYPICAL OUTLET DITCH

NOT TO SCALE

DESIGN DATA

WETLAND BASIN #_____

(A) OUTLET ELEV. = _____FT.

(B) IS EXCAVATION REQUIRED AT OUTLET? (Select One)

☐ YES ☐ NO

IF "YES":

(C) BOTTOM ELEV. = _____FT.

(D) BOTTOM WIDTH = _____ FT.

(E) SIDE SLOPES OF = _____:1

(F) APPROXIMATE LENGTH = _____ FT.

MATERIAL INFO.

TYPE OF PIPE REQUIRED FOR PROPOSED TILE (G) (Select One)

☐ DUAL-WALL POLYETHYLENE

☐ SINGLE-WALL POLYETHYLENE

☐ OTHER:_____

BILL OF MATERIALS

SIZE	UNIT	ITEM DESCRIPTION	UNIT	QTY.
	DIA. INCHES	(G) PROPOSED TILE	LIN. FT.	
	DIA. INCHES	(H) CMP OUTLET PIPE (16 ga. Annular or Helical)	LIN. FT.	
		(I) HINGED TYPE RODENT GUARD FOR CMP OUTLET PIPE	EACH	
		(K) GROUTED JUNCTION AT PIPE OUTLET	EACH	
		(B) EXCAVATE OUTLET DITCH (As directed-If Required)		
		(J) GROUTED TILE JUNCTION (May Require Coupler)	EACH	

I HEREBY CERTIFY THAT THIS PLAN, SPECIFICATION, OR REPORT WAS PREPARED BY ME OR UNDER MY DIRECT SUPERVISION AND THAT I AM A DULY LICENSED PROFESSIONAL ENGINEER UNDER THE LAWS OF THE STATE OF MINNESOTA.

PRINT NAME: _____

SIGNATURE: _____

DATE: _____ LICENSE #: _____

Project Name:

TILE OUTLET/RE-ROUTE DETAILS

Approved By Date

Title

Easement OR Project No.

Plan Sheet of

BWSR
NRCS
USFWS

DWG# MN-ENG-209