(✓) _____ See design sheet for channel cuts and ridge fills

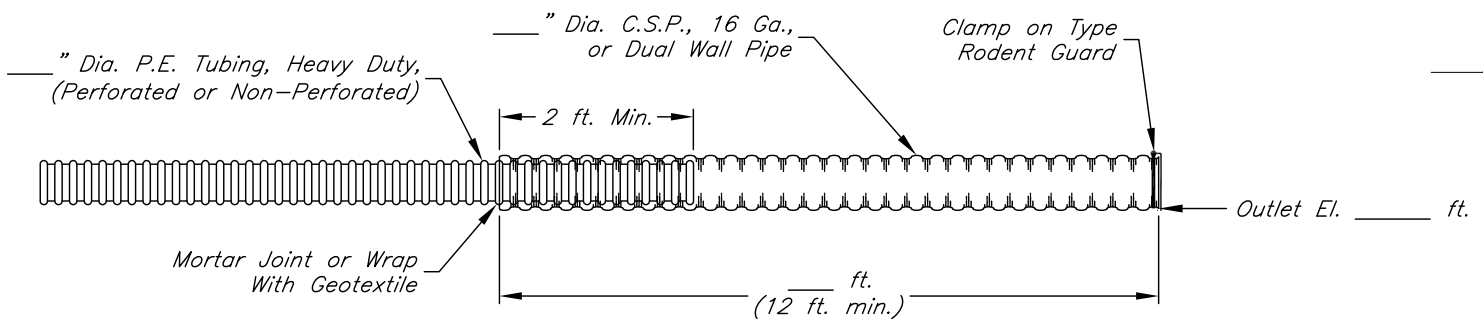

TILE OUTLET

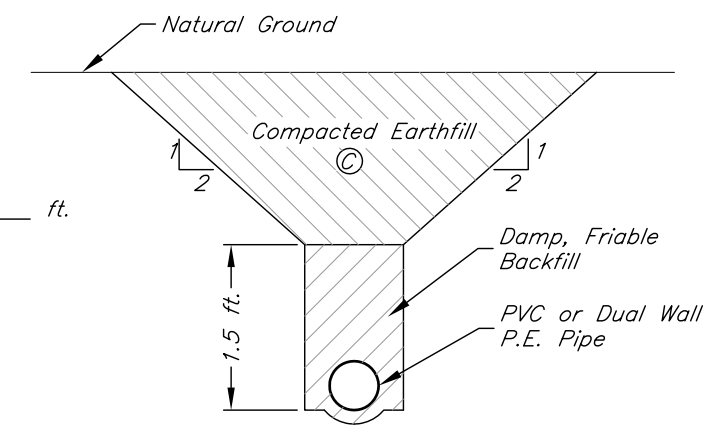

TRENCH UNDER EARTHFILL

Before start of construction, the owners of any utilities involved must be notified. The excavator is responsible for giving this notice by calling "Gopher State One-Call" at (651)454-0002 (Twin Cities metro area) or (800)252-1166 (all other locations) at least 48 hours prior to any excavation.

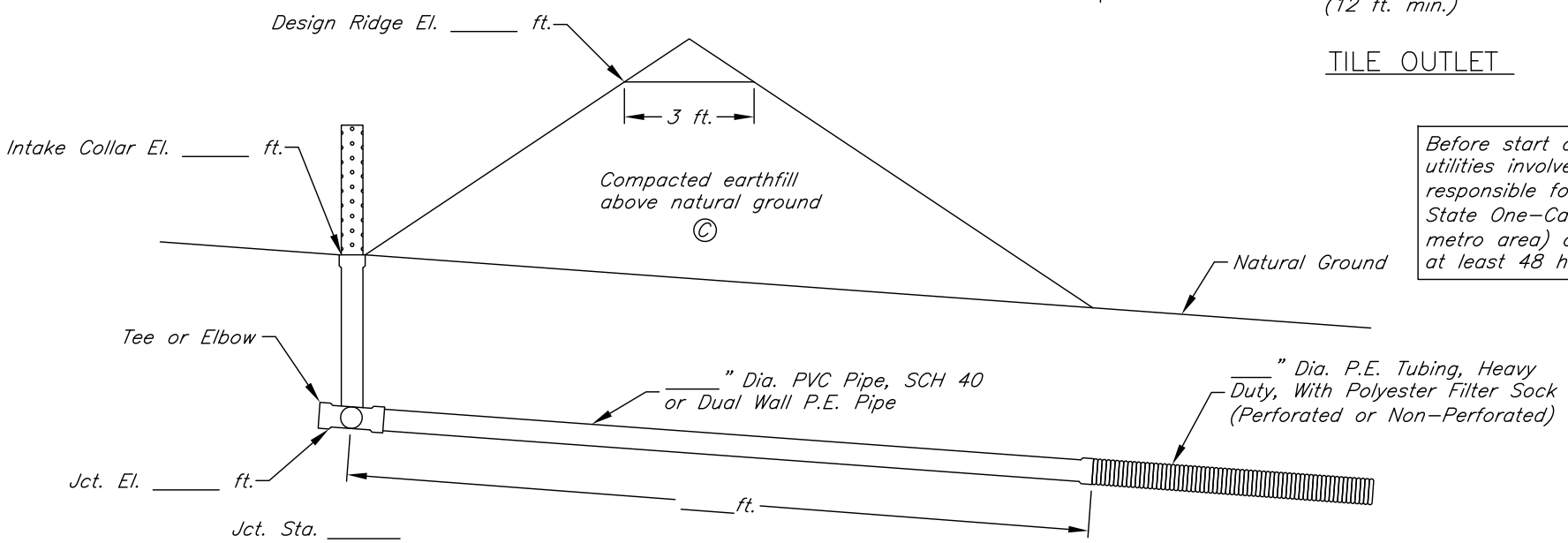

PIPE UNDER EARTHFILL

_____ ft./ft. min. grade to tile outlet
_____ ft./ft. max. grade to tile outlet
(✓) _____ See cut sheet for tile sizes/grades to the tile outlet

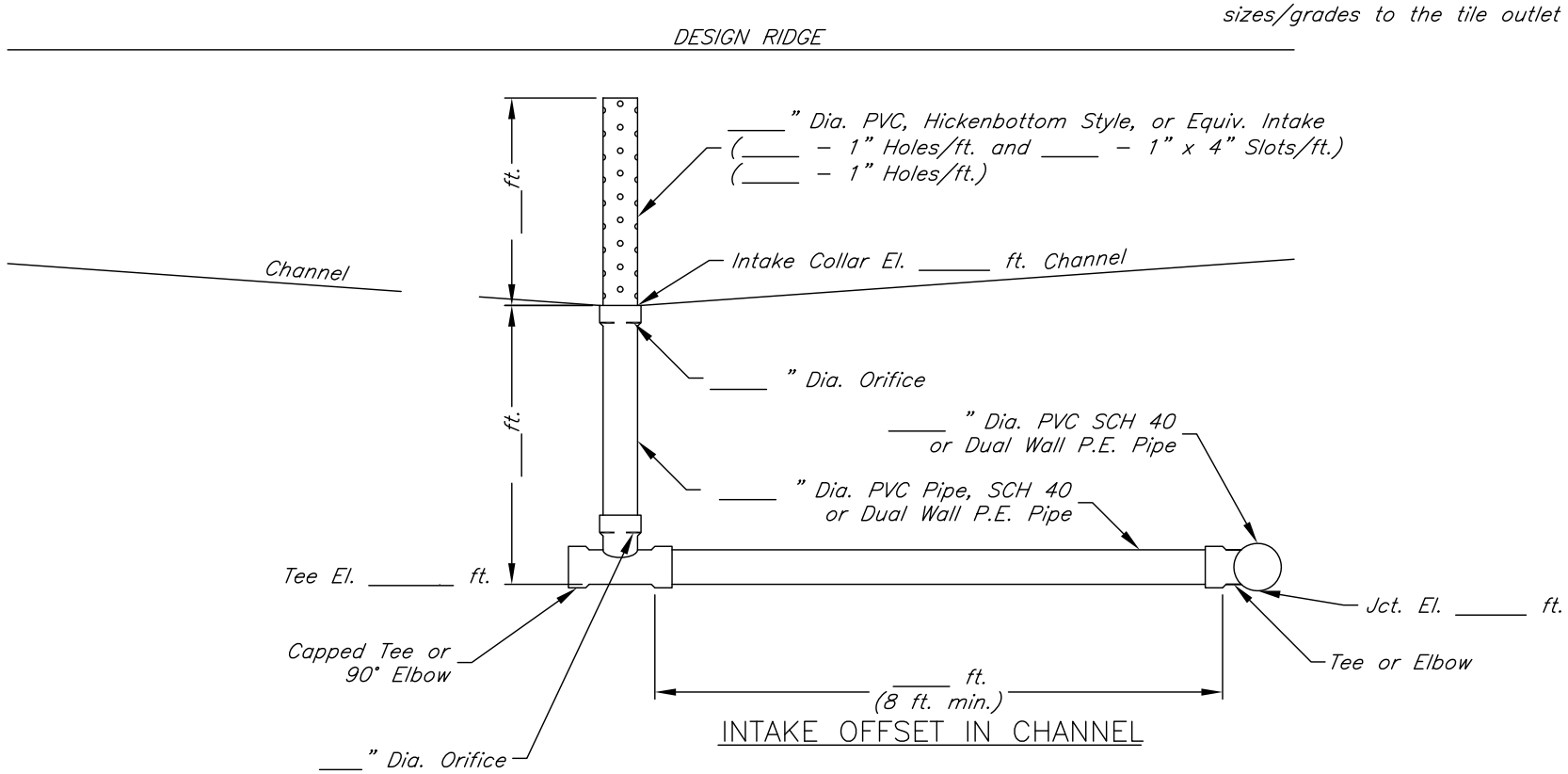

INTAKE OFFSET IN CHANNEL

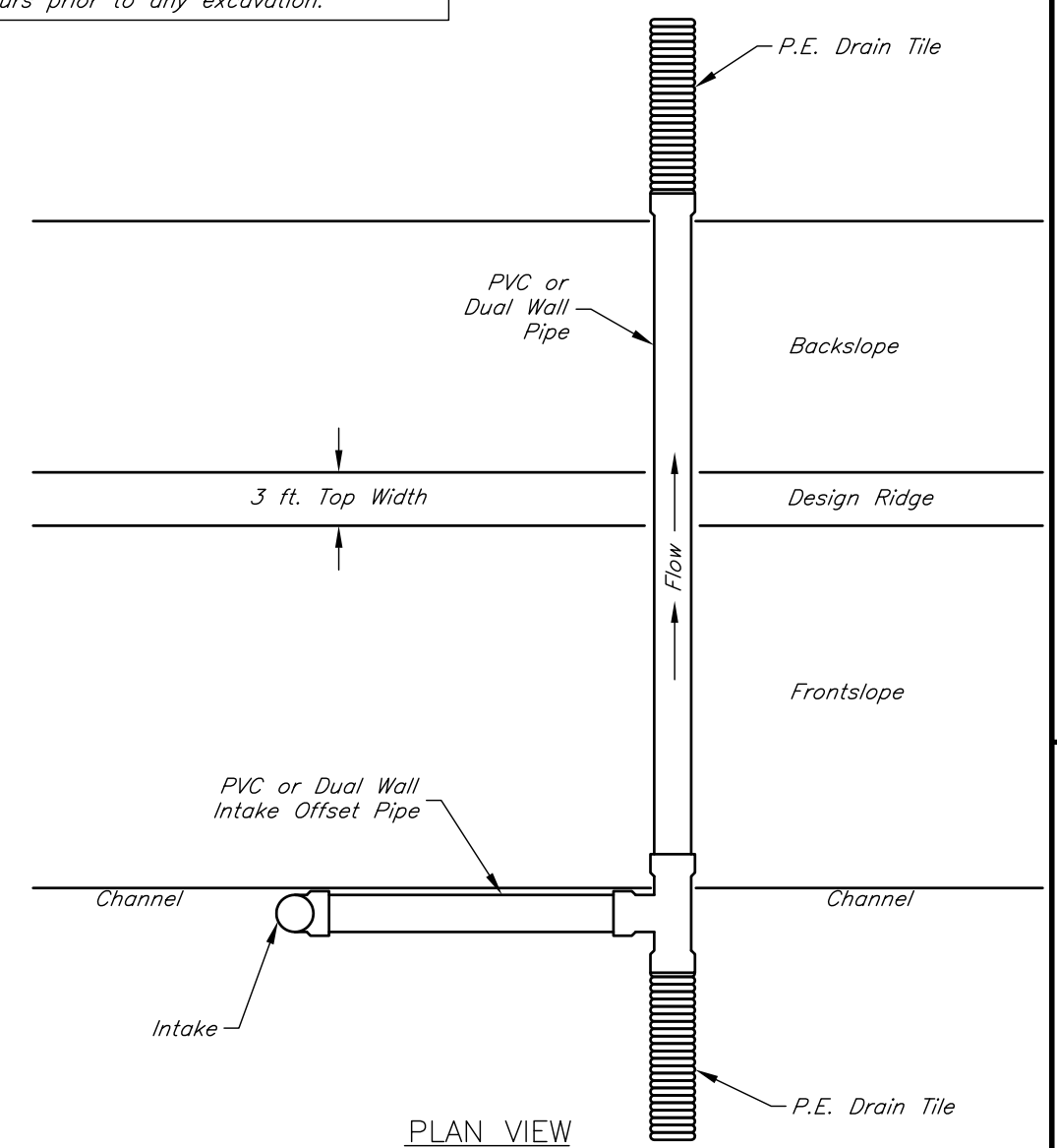

PLAN VIEW

EJC _____

Date
Designed
Drawn
Checked
Approved

TERRACE INTAKE # DETAIL
Sub-Title
Sub-Title
---- County, Minnesota

NRCS
Natural Resources Conservation Service
United States Department of Agriculture

File Name
MN-ENG-501.dxf
Drawing No.
MN-ENG-501
5/3/2011
Sheet ### of .